GORILLA SPORTS

AEROBIC DECK MANUAL

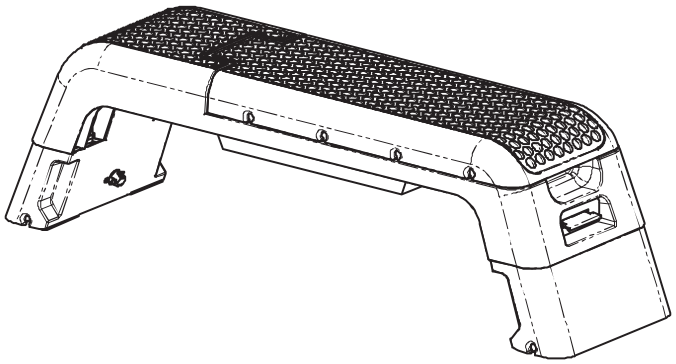

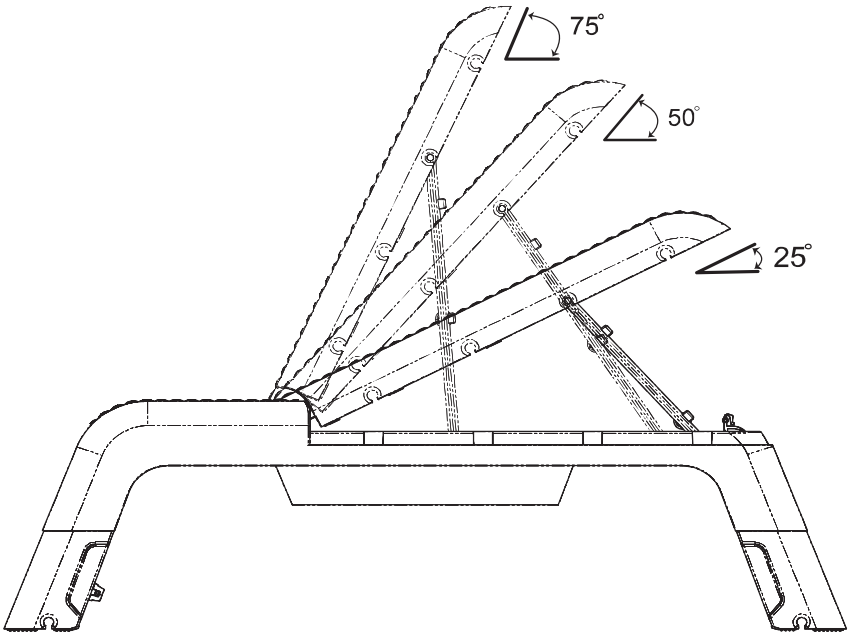

101292-00019-0001

GORILLA SPORTS

TABLE OF CONTENTS

Page 2 ..... Table of Contents

Page 3 ..... Safety Instructions

Page 5 ..... Technical data overview

Page 6 ..... Parts list

Page 7 ..... Assembly Instructions

Page 11 ..... Cleaning, Maintenance and Disposal

Page 12 .....Warranty

Page 13 ..... Training information

Page 15 ..... Warm-Up/Stretching Exercises

Page 16 ..... Notes

General information

Please ensure all users have read and understood the assembly and operating instructions before use. These instructions are integral to the product and should be kept readily accessible for future reference. Adherence to the safety and maintenance guidelines is crucial. Deviating from these instructions may lead to health risks, accidents, or damage to the device, absolving the manufacturer and distributor of liability.

Personal safety

Before using this device, consult your doctor to ensure the training is suitable for your health. This is particularly important for individuals with a family history of heart disease or high blood pressure, smokers, those with high cholesterol, overweight individuals, and those who have been inactive over the past year. If you are on heart-related medication, seeking medical advice is critical. Be aware that excessive exercise can pose serious health risks. If you experience weakness, nausea, dizziness, pain, shortness of breath, or other unusual symptoms during training, stop immediately and seek medical attention.

Sports equipment is not a toy and should be used only as intended, typically by one person at a time. Only those properly informed and instructed should operate this equipment. Vulnerable individuals, including children, and those with physical or mental impairments, should use the device only under supervision. Precautions must be taken to prevent unsupervised children from accessing the equipment. Ensure that all users and bystanders avoid placing any body parts near moving components.

Wear appropriate fitness clothing and shoes while using this device. Ensure clothing is form-fitting and cannot catch in any part of the device. Choose training shoes that provide a firm grip and feature non-slip soles.

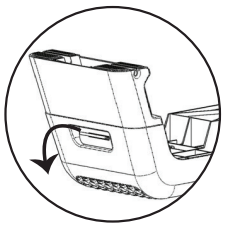

To ensure the product's longevity and prevent damage to the plastic lock, always pull the latch before closing the legs.

Safety Precautions

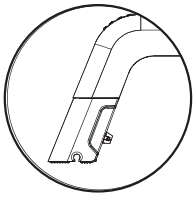

☑

Leg is not locked securely

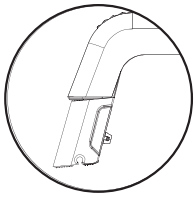

☒

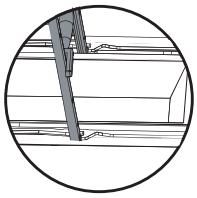

☑

Backrest slides as the bracket is not put in the right position

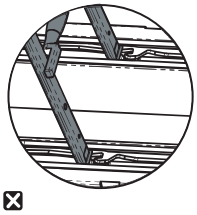

☒

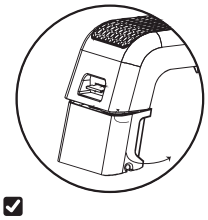

☑

Not squeezing the latching mechanism when opening the backrest/leg

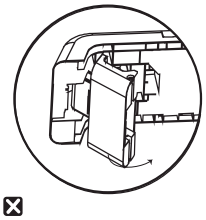

☒

Assembly

Ensure all parts and tools listed in the parts list are present, noting some may be pre-assembled. Keep children and pets away from the assembly area to prevent injury or suffocation from tools and packaging materials. Ensure ample space is available for assembly. Regularly check and tighten all screws, nuts, and connections before initial use and periodically thereafter to maintain the device's safe operation.

Location

Install the device on a flat, stable, and dry surface. If the surface is uneven, use adjustable parts of the device to level it, if available. Place a floor protection mat underneath to guard against pressure marks and dirt. Remove all objects from the training area before starting. Do not use the device outdoors or in humid environments.

TECHNICAL DATA OVERVIEW

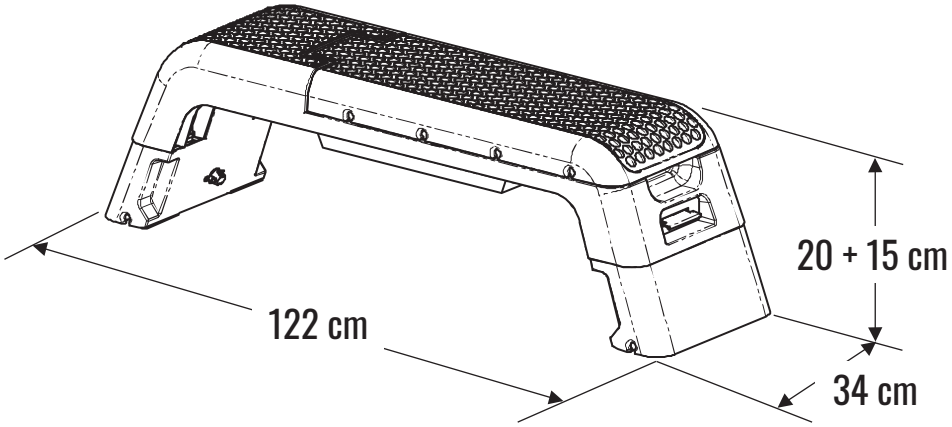

Material: Thermoplastic Rubber (TPR), Polypropylene (PP), Iron
Weight: 12.5 kg
Max Load: 200 kg
Features: Adjustable incline, decline, and flat positions

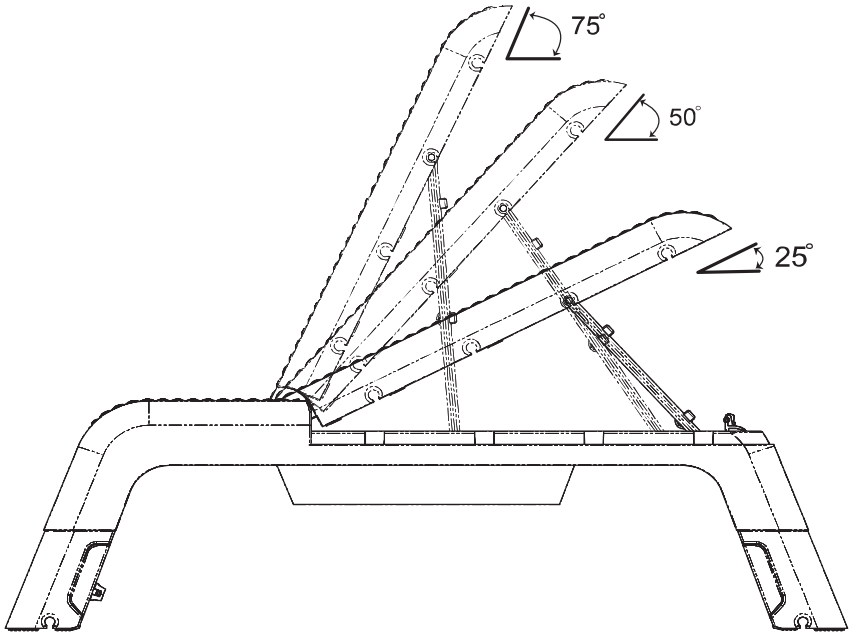

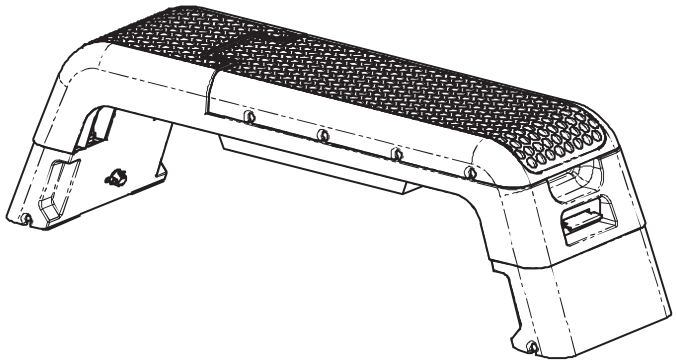

Aerobic deck

Adjustable Backrest Height

❶

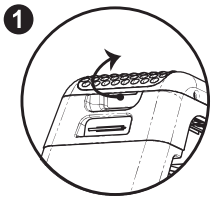

Open the backrest: Squeeze latching mechanism

❷

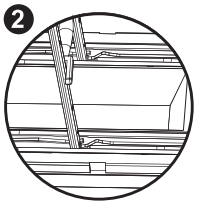

Lift and push the backrest inward to make it slide

❸

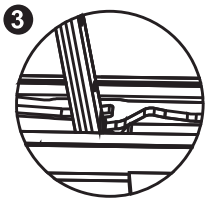

Put the bracket in one of 3 positions to keep the backrest in place before use

There are 3 height signals for 3 angles 25°, 50°, 75°

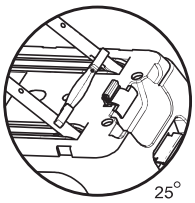

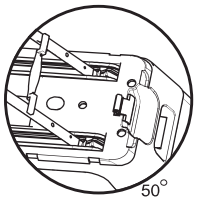

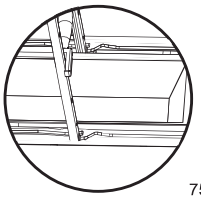

Adjustable Legs Height - Original position

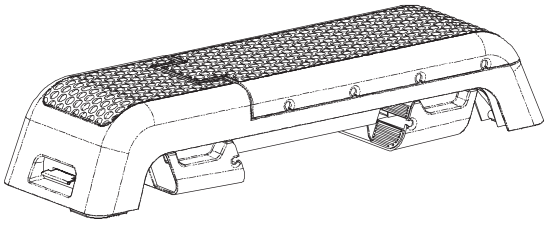

Step 1

Latching mechanism

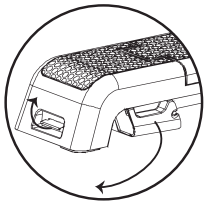

Click sound signal

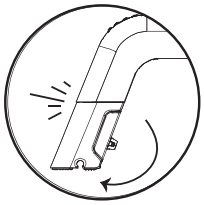

Continue as Step 1 - Decline style

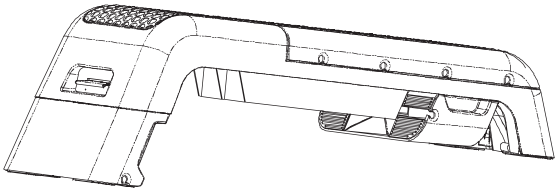

Step 1:

Lift one side of the leg
Squeeze the latching mechanism
Fold out the leg (colored part) until you hear a “click” sound

Repeat Step 1 for the other leg

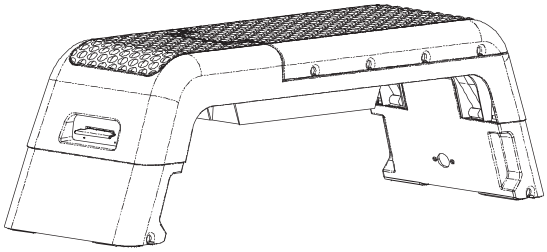

Adjustable Legs Height - Open position Close

Step 2

Latch mechanism

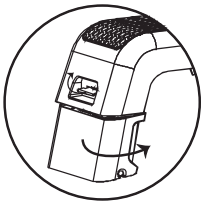

Fold the leg in

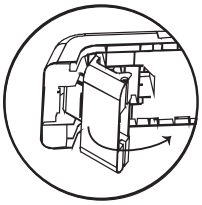

Lock connector

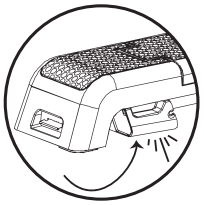

Continue as Step 2

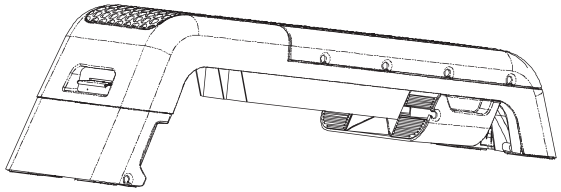

Step 2:

Lift one side of the leg
Squeeze the latching mechanism
Fold the leg (colored part) inward
Press the colored part firmly back into its original position until you hear a “click,” indicating the leg is securely locked

Repeat Step 2 for the other leg and gently shake to check stability

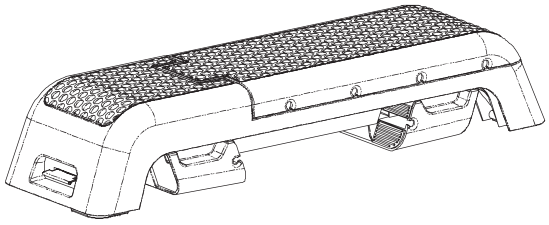

The simplest way to use your deck

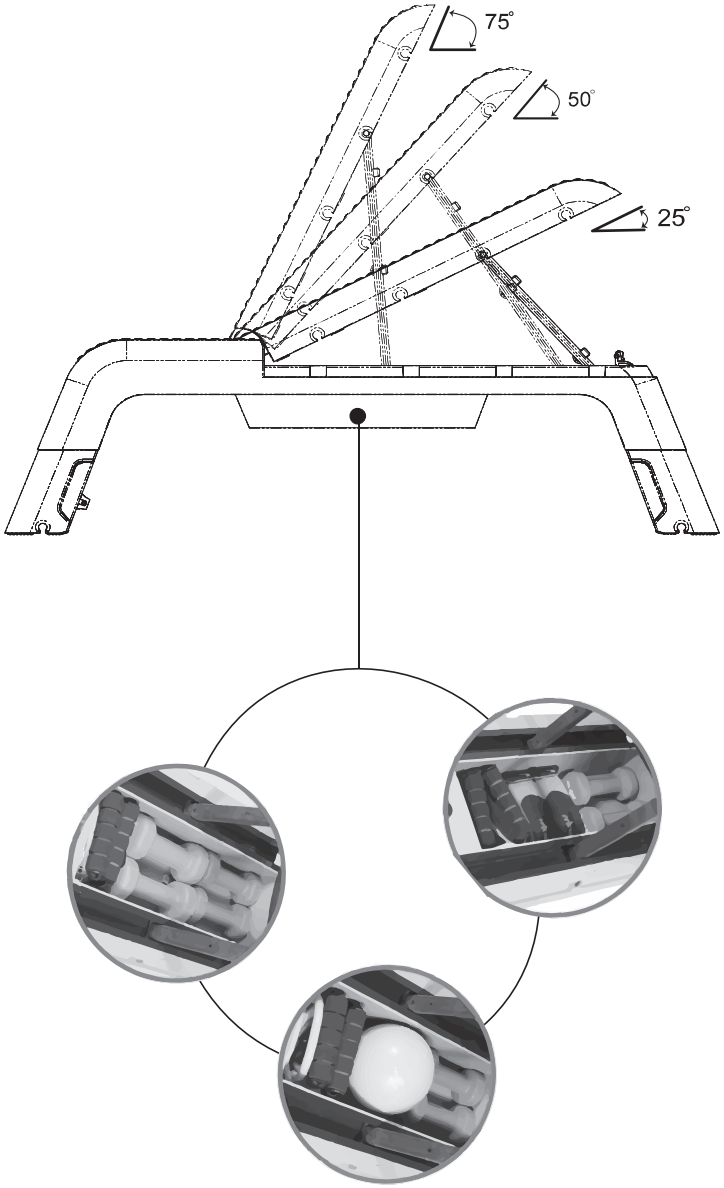

Your deck includes a convenient storage compartment for hand weights, resistance tubes, and other small fitness accessories.

Cleaning

Clean the device using only a slightly damp cloth. **Attention!** Avoid using gasoline, thinner, or other harsh cleaning agents, as they may damage the surface. This device is intended solely for private, indoor use. Ensure it remains clean and dry; damage from body sweat or other liquids is not covered under the warranty.

Maintenance

Regularly check screws and moving parts to ensure the device is functioning properly before use. The device may only be used for training if it is working properly. For repairs or spare parts, contact our customer service. WARNING: Only use the device after successful repairs have been completed.

Disposal

For environmental protection, do not dispose of packaging materials, empty batteries, or device parts with household waste. Instead, deposit them in designated recycling bins or at appropriate collection points. Please comply with current disposal regulations.

WARRANTY

The warranty lasts for 24 months from the date of purchase or delivery, applicable only to new goods. Defects identified during the warranty period will be repaired at no charge. Defects must be reported immediately to the seller. The seller may choose to fulfill the warranty obligations by providing spare parts or a replacement, with the right to replace parts without affecting the warranty. On-site repairs are not included. This warranty does not cover devices used for commercial or industrial purposes; such use will void the warranty. Coverage is limited to material or manufacturing defects. Wear parts, damages from misuse, excessive force, or unauthorized modifications are not covered. Keep the original packaging during the warranty period for safe transport if returns are needed. Do not send goods carriage forward. The warranty period is not extended by warranty claims. Compensation for external damages is excluded unless liability is mandated by law.

Manufacturer:

Gorilla Sports GmbH
Nordring 80
64521 Groß-Gerau

Here you can find an overview of our international partners:
www.gorillasports.eu.

Training preparations

Before you start training, ensure both your equipment and body are prepared. If you've been inactive in strength or endurance training for a while, consult your family doctor for a fitness check-up before starting. Discuss your training goals with your doctor to gain valuable tips and insights, especially if you're over 35, overweight, or have cardiovascular concerns

Workout planning

Effective, goal-oriented training requires careful planning. Integrate fitness sessions as a regular part of your daily routine to avoid disruptions or indefinite postponements. Plan your workouts months in advance, rather than day-to-day or week-to-week. To stay motivated during your sessions, consider using music and setting up rewards for meeting realistic goals. For instance, aim to lose 1 kg in four weeks or increase your training weight by 10 kg in six weeks. Reward yourself upon achieving these milestones to maintain motivation and commitment.

Training frequency

Experts suggest engaging in endurance or strength training 3 to 4 days per week. While frequent training can accelerate progress towards your goals, it's crucial to incorporate adequate rest. Ensure you schedule at least one rest day after each session to allow your body ample time to recover and regenerate.

Hydration

Maintaining adequate fluid intake before and during your workout is vital. In a typical 60-minute session, you might lose up to 0.5 liters of fluid. To replenish this loss, consider drinking an apple spritzer made with one-third apple juice and two-thirds mineral water, as it restores the electrolytes and minerals lost through sweat. Drink approximately 330 ml about 30 minutes before starting your session and continue to hydrate consistently throughout your workout.

Warm-Up

Always begin your training session with a 5 to 7-minute warm-up. Use low-intensity activities like skipping rope or using a cross trainer to prepare your body for the workout ahead. This is essential for optimal performance during your session.

Cool-Down

Avoid stopping abruptly after your main training session. Instead, continue with a 5- to 7-minute cool-down on an exercise bike, cross-trainer, or similar equipment at low intensity, like your warm-up routine. Always conclude your session by stretching your muscles thoroughly.

Thighs



Place your right hand on a wall or your exercise equipment for support. Lift your left foot backwards and grasp it with your left hand, ensuring your knee points directly downward. Gently pull your thigh back until you feel a mild stretch in the muscle. Hold this position for 15 to 20 seconds. Carefully release your foot and lower your leg. Repeat the stretch with your right leg.

Legs and lower back



Sit on the floor with your legs extended. Reach forward and try to grasp the tops of your feet with both hands, extending your arms and slightly bending forward at the upper body. Hold this position for 15 to 20 seconds. Then, release your feet and gradually straighten your upper body back to the starting position.

Triceps and shoulder



Reach behind your head to your right shoulder with your left hand, then pull on your left elbow with your right hand until you feel a slight stretch. Hold this position for 15-20 seconds. Switch and repeat the stretch using your right hand to reach your left shoulder.

Upper body

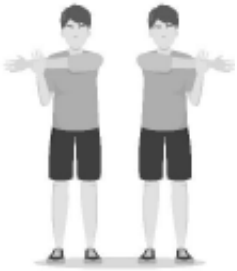

Extend your left arm across your chest at shoulder level, then use your right hand to pull gently on your left upper arm until you feel a slight stretch. Hold this position for 15-20 seconds. Switch and repeat the exercise with your right arm.

NOTES

GORILLA SPORTS

NORDRING 80, 64521 GROß-GERAU
WWW.GORILLASPORTS.EU